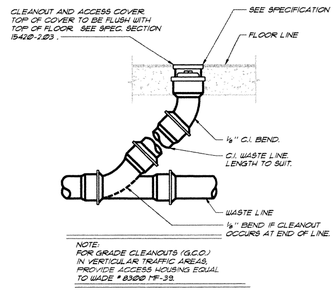

1 M4.1 **FLOOR CLEANOUT DETAIL**
N.T.S

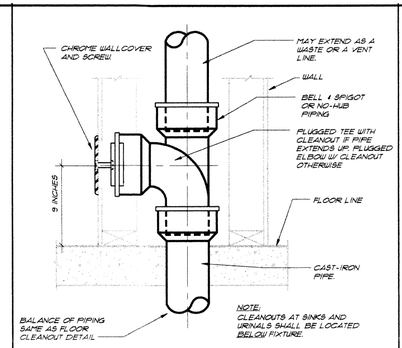

2 M4.1 **WALL CLEANOUT DETAIL**
N.T.S

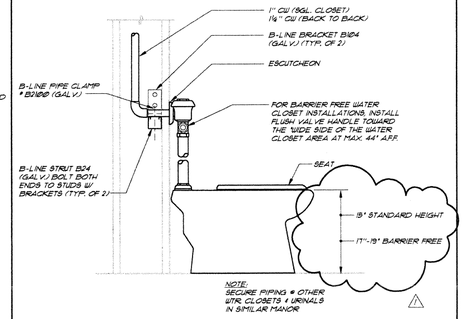

FLUSH VALVE INSTALLATION DETAIL
3 M4.1 N.T.S

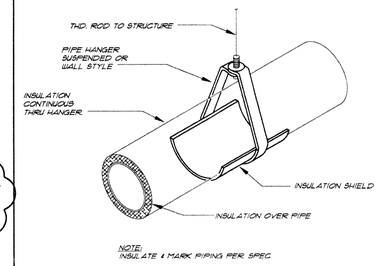

TYPICAL PIPE HANGER DETAIL
4 M4.1 N.T.S

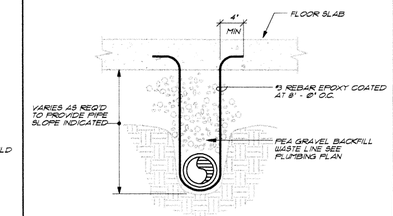

REBAR PIPE STIRRUP DETAIL
5 M4.1 N.T.S

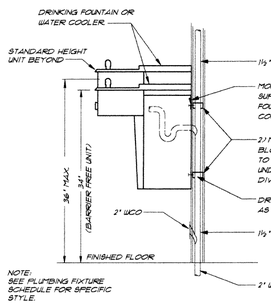

6 M4.1 **WATER COOLER DETAIL**
N.T.S

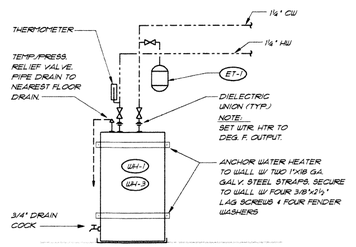

7 M4.1 **WATER HEATER DETAIL**
N.T.S

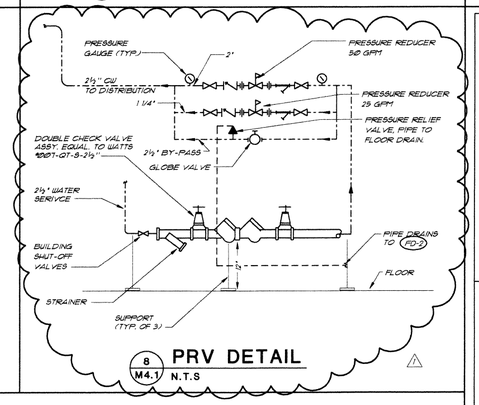

8 M4.1 **PRV DETAIL**
N.T.S

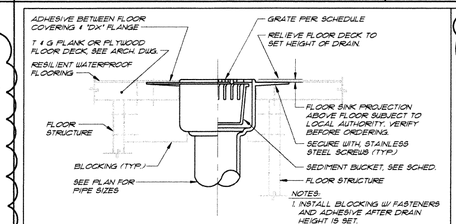

A **WOOD FLOOR INSTALLATION**

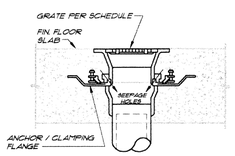

B **CONCRETE INSTALLATION WO/ MEMBRANE**

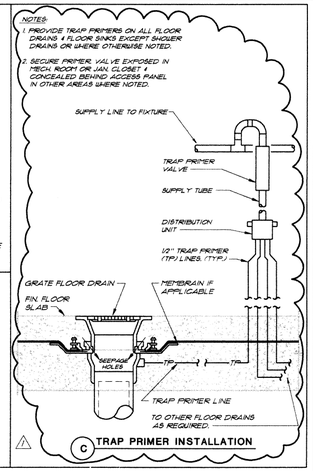

C **TRAP PRIMER INSTALLATION**

FLOOR DRAIN / SINK INSTALLATION STYLES
9 M4.1 N.T.S

NOTES:
1. VERIFY FLOORING CONSRUCTION BEFOR ORDERING DRAINS.
2. FLOOR DRAINS SHALL BE FLUSH TO ¼" BELOW FIN. FLOOR, FLOOR SINKS SHALL BE ½" ABOVE TO ¼" BELOW FIN. FLOOR VERIFY W/ LOCAL PLUMBING INSPECTOR.

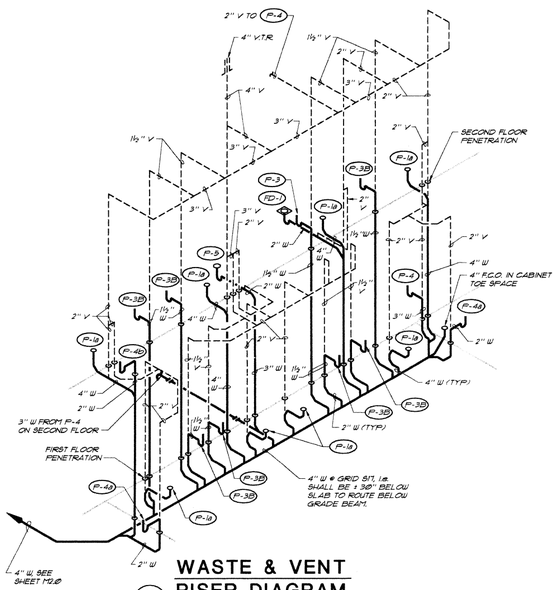

WASTE & VENT RISER DIAGRAM
10 M4.1 N.T.S

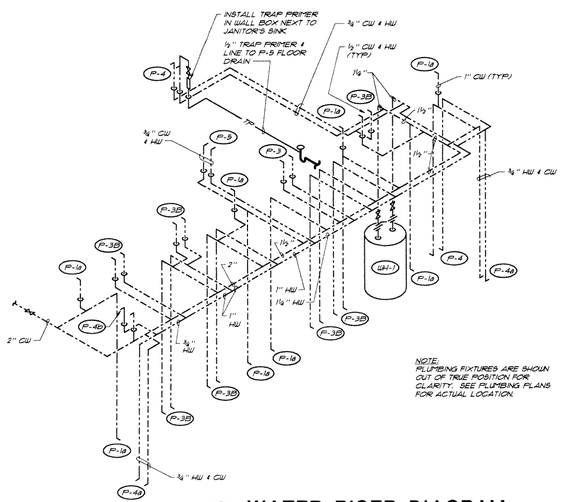

11 M4.1 **WATER RISER DIAGRAM**
N.T.S

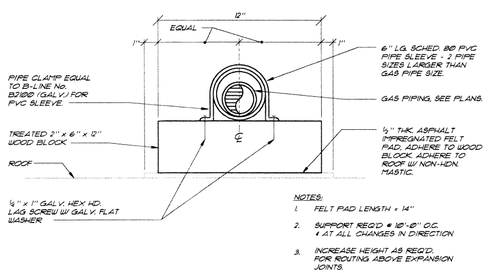

12 M4.1 **PIPE SUPPORT DETAIL**
N.T.S

MITHUN PARTNERS
ARCHITECTURE PLANNING & INTERIOR DESIGN
414 OLIVE WAY
SUITE 800
SEATTLE WA 98101
(206) 623 3344
FAX (206) 623 7005

SUN HEALTHCARE SYSTEMS, INC.
CAMPUS: PHASE ONE
ANACORTES, WASHINGTON

TRUE NORTH

NO.	DATE	REVISION
1	5/18/99	CONSTRUCTION SET

N.B.
PARTNER IN CHARGE

R.V.
PROJECT MANAGER

R.T.G.
DRAWN

P.M.J.
CHECK

EXPIRES 2/15/00

SIDER & BYERS ASSOCIATES, INC.
MECHANICAL ENGINEERS
100 NICKERSON, SUITE 304
SEATTLE, WASHINGTON 98109
(206) 285-0896 FAX (206) 285-1045

PLUMBING DETAILS

98046
PROJECT NO.

5/18/99
DATE

M4198046
COMPUTER FILE NAME

M4.1 CONSTRUCTION SET
SHEET NUMBER

COPYRIGHT © 1998 MITHUN PARTNERS, INC.

CAD FILE: C:\CAD\98046\M4198046 PLOT DATE: MAY 12, 1999 9:00 AM